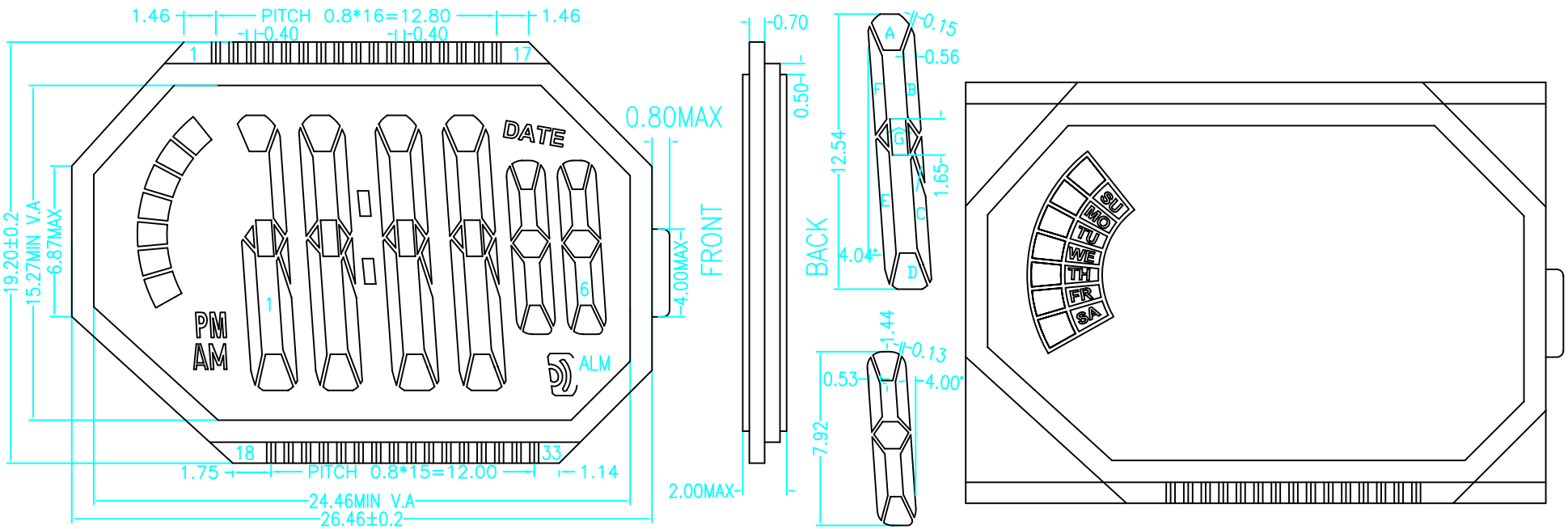

PIN	1	2	3	4	5	6	7	8	9	10	11	12	13	14	15	16	17	18	19	20	21	22	23	24	25	26	27	28	29	30	31	32	33
COM1	/	PM	/	/	/	/	/	/	1ADEG	1C	2A	COL	3A	4A	5A	6A	COM1	2F	2G	2B	3F	3G	3B	4F	4G	4B	5F	5G	5B	6F	6G	6B	DATE
COM2	COM2	AM	SA	FR	TH	WE	TU	MO	SU	1B	/	/	/	/	/	/	/	2E	2D	2C	3E	3D	3C	4E	4D	4C	5E	5D	5C	6E	6D	6C	ALM

NOTES:

1. DISPLAY TYPE: TN.
2. VIEWING DIRECTION: 6 O'CLOCK.
3. DRIVE METHOD: 1/2DUTY, 1/2BIAS.
4. OPERATING VOLTAGE: 3.0V.
5. POLARIZER MODE: TRANSMISSIVE/POSITIVE.
6. OPERATING TEMP: 0 ~ +50°C.
7. STORAGE TEMP: −10 ~ +60°C.

ENG7

SUNWAY GROUP LCD

SCALE		UNIT	MM	MODEL NO.	YK1069ZTBA
APPROVED		CHECKED		DESIGNED	DATE
					2003.11.19